Current part is item (12) on diagram. Available at www.oshkoshequipment.com

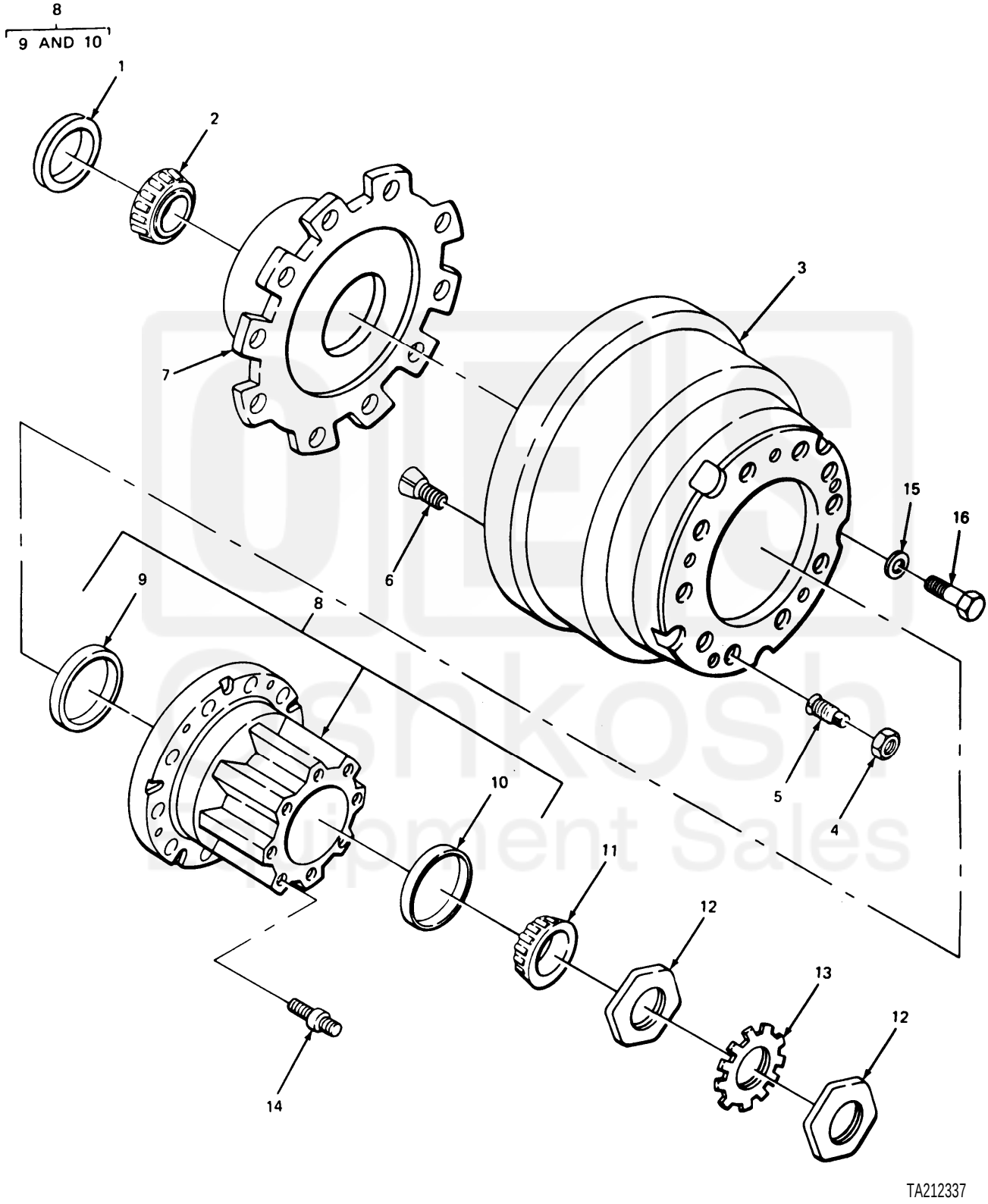

FIGURE 117. TANDEM HUB AND DRUM ASSEMBLY.

Current part is item (12) on diagram. Available at www.oshkoshequipment.com

Current part is item (12) on diagram. Available at www.oshkoshequipment.com

(1) ITEM NO.	(2) SMR CODE	(3) FSCM	(4) PART NUMBER	(5) DESCRIPTION AND USABLE ON CODE (UOC)	(6) QTY
				GROUP 1311 WHEEL ASSEMBLY	
				FIG. 117 TANDEM HUB AND DRUM ASSEMBLY	
1	PAOZZ	80201	48884	SEAL,PLAIN ENCASED INNER HUB CONE	4
2	PAOZZ	60038	760	CONE AND ROLLERS,TA HUB INNER	4
3	PAOZZ	45152	4600TA372	BRAKE DRUM	4
4	PAOZZ	09386	49417	NUT OUTER WHEEL STUD,LEFT HAND	20
4	PAOZZ	09386	49416	NUT,PLAIN,HEXAGON OUTER WHEEL STUD, RIGHT HAND	20
5	PAOZZ	09386	49415	NUT,CAP,DUAL WHEEL INNER,WHEEL STUD,LEFT HAND	20
5	PAOZZ	09386	49414	NUT,CAP,DUAL WHEEL INNER,WHEEL STUD RIGHT HAND	20
6	PAOZZ	78500	20X1421	STUD,WHEEL LEFT HAND	20
6	PAOZZ	78500	20X1420	STUD RIGHT HAND THREAD	20
7	PAOZZ	45152	4600TA373	SEAL RING,METAL BRAKE DRUM	4
8	XDOOO	45152	4600TA371	HUB AND CUP ASSEMBLY	4
9	PAOZZ	60038	752	.CUP,TAPERED ROLLER WHEEL INNER	1
10	PAOZZ	78500	742	.CUP,TAPERED ROLLER WHEEL OUTER	1
11	PAOZZ	60038	749	CONE AND ROLLERS,TA WHEEL OUTER	4
12	PAOZZ	45152	5EX162	NUT,PLAIN,HEXAGON	8
13	PAOZZ	52304	11245	NUT,SELF-LOCKING,RO CONE	4
14	PAOZZ	45152	4600TA279	STUD HUB TO AXLE SHAFT	32
15	PAOZZ	45152	1804-HX	WASHER,FLAT BRAKE DRUM MTG	5
16	PAOZZ	45152	2CH142	BOLT,MACHINE BRAKE DRUM MTG	5
				END OF FIGURE	

Current part is item (12) on diagram. Available at www.oshkoshequipment.com